Polska, 87-100 Toruń, ul. M.Skłodowskiej-Curie 65
tel.: +48 56 619 52 01, fax: +48 56 619 54 31,
e-mail: marketing@tofama.eu
www.tofama.eu

TOFAMA SA

# POMPY WIROWE PIONOWE KFP, GTPM

SWW 0871-111
Kat.nr 341-02/97

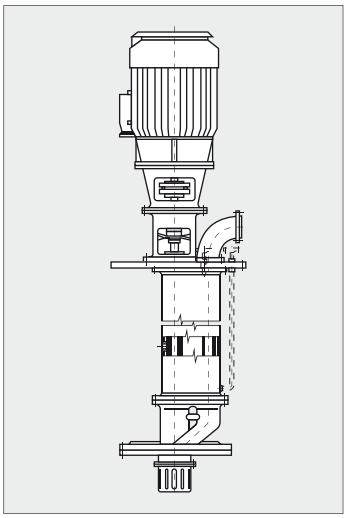

## ZASTOSOWANIE

Do pompowania mediów wymagających grzania.

## OPIS TECHNICZNY

Pompy pionowe z płaszczem grzewczym jednostopniowe z wirnikami półotwartymi KFP i dwukanałowymi GTPM. Zespół wirujący oparty w górnej części w jednym lub dwu łożyskach kulkowych, natomiast w dolnej części w jednym łożysku ślizgowym smarowanym cieczą pompowaną.
Pompy 50 KFP 40 w najdłuższych wykonaniach posiadają dodatkowe łożysko ślizgowe w środkowej części wału.

## DANE TECHNICZNE

Parametry i wymiary zgodne z załączonymi wykresami zbiorczymi i tabelami.
Maksymalna temperatura pompowanego medium: 150 °C
Maksymalna temperatura pary grzewczej: 150 °C
Ciśnienie pary grzewczej max. 0,5 MPa.

Zbiorczy wykres pracy pomp
*Comprehensive pump operation diagram.*

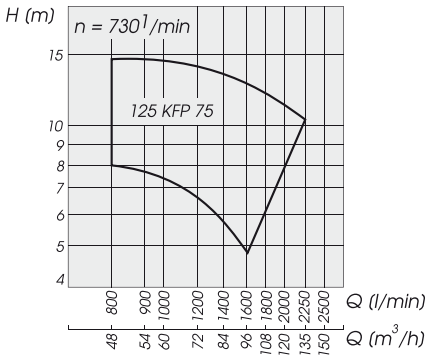


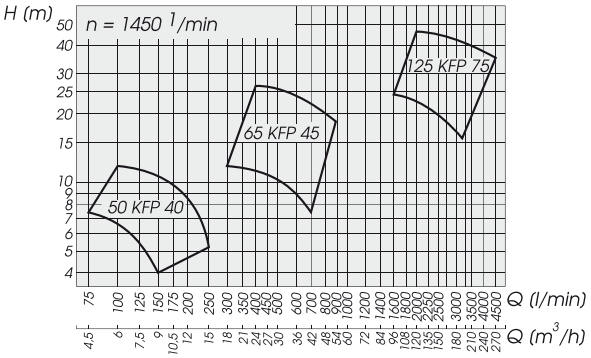


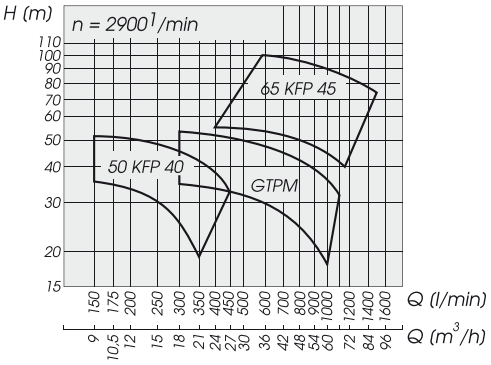

Polska, 87-100 Toruń, ul. M.Skłodowskiej-Curie 65
tel.: +48 56 619 52 01, fax: +48 56 619 54 31,
e-mail: marketing@tofama.eu
www.tofama.eu

TOFAMA SA

## Pompa GTPM

$K_t$ - króciec tłoczny
$K_1$ - króciec doprowadzający parę
$K_2$ - króciec odprowadzający kondensat
Masa zespołu pompy: 379 kg

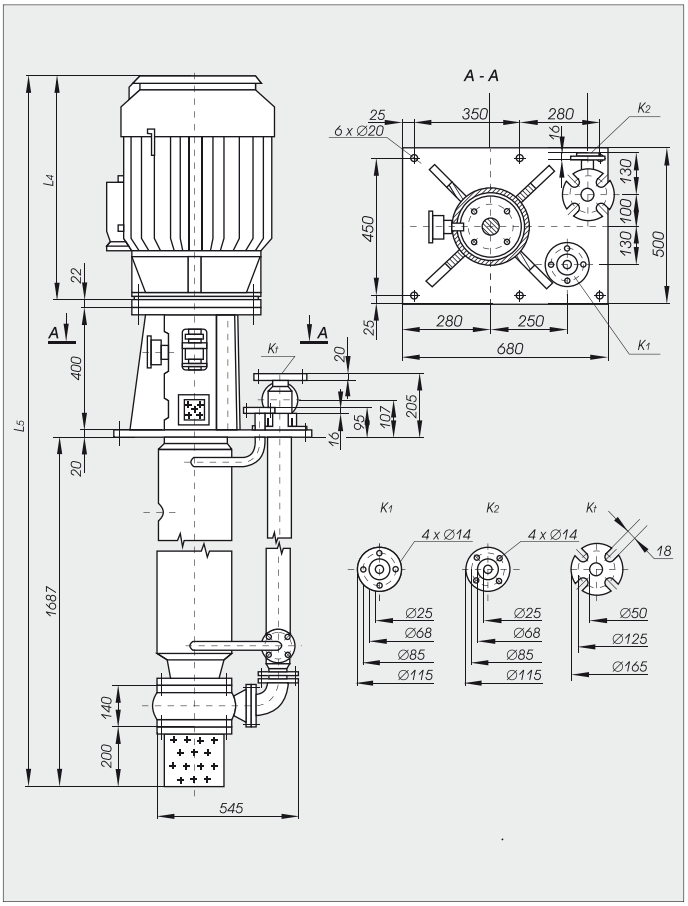


## Pompa 50 KFP 40

$K_1$ - króciec doprowadzający parę
$K_2$ - króciec odprowadzający kondensat

| L | $L_1$ | $L_2$ | Masa *Weight* (kg) |
|---|---|---|---|
| 710 | 860 | 957 | 105 |
| 1180 | 1130 | 1427 | 121 |
| 1725 | 1875 | 1972 | 128 |
| 2195 | 2345 | 2442 | 138 |

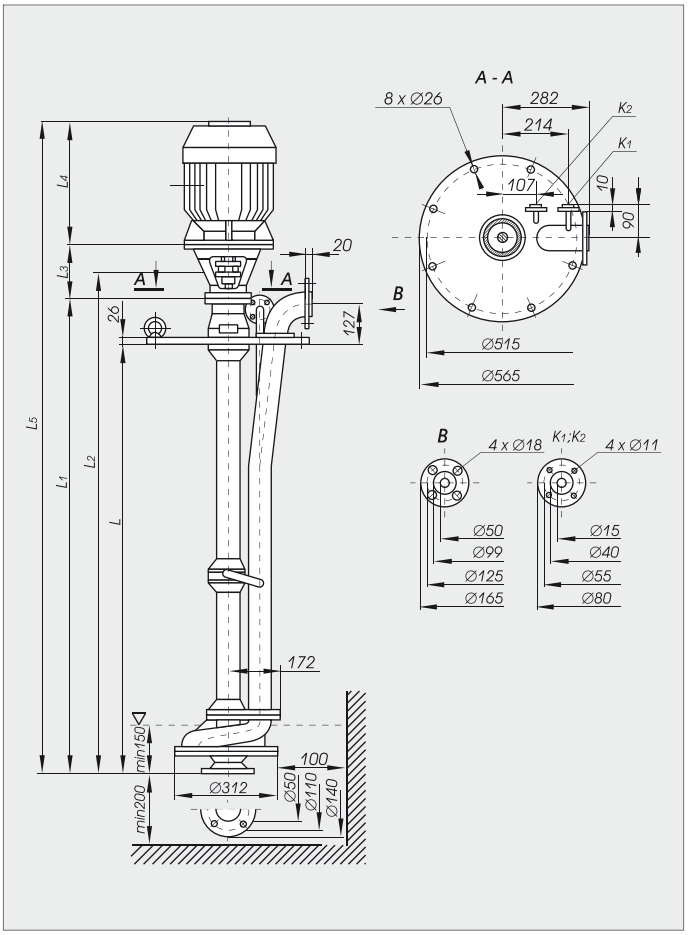

TOFAMA SA

Polska, 87-100 Toruń, ul. M.Skłodowskiej-Curie 65
tel.: +48 56 619 52 01, fax: +48 56 619 54 31,
e-mail: marketing@tofama.eu
www.tofama.eu

## Pompa 65 KFP 45, 125 KFP 75

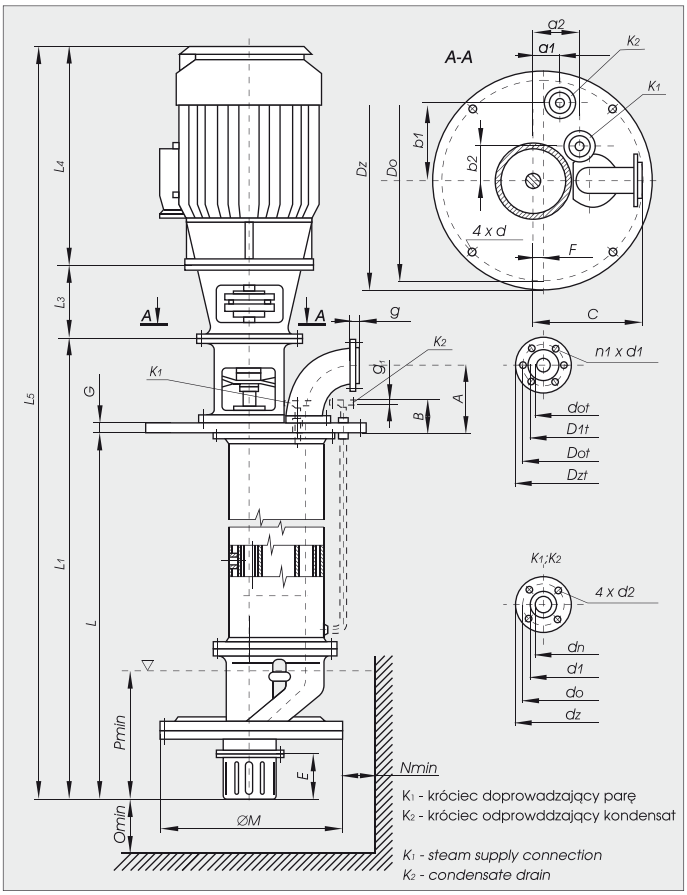


Tabela 2. Wymiary zespołu pomp 65 KFP 45 i 125 KFP 75
*Table 2. Dimensions of 65 KFP 45 and 125 KFP 75 pump units.*

| Typ pompy *Pump type* | | | 65 KFP 45 | 125 KFP 75 |
|---|---|---|---|---|
| Wymiary w mm *Dimensions in mm* | Pompa *The pump* | L | 1500/2000 | 1500/2000 |
| | | $L_1$ | 1790/2290 | 1790/2290 |
| | | $D_z$ | 755 | 975 |
| | | $D_o$ | 705 | 920 |
| | | A | 190 | 250 |
| | | B | 93 | 96 |
| | | C | 355 | 455 |
| | | E | 125 | 134 |
| | | F | 29 | 18 |
| | | G | 23 | 26 |
| | | M | 440 | 660 |
| | | N | 100 | 200 |
| | | O | 100 | 200 |
| | | P | 460 | 460 |
| | | d | 27 | 30 |
| Masa *Weight* (kg) | | | 385/430 | 660/726 |
| Typ pompy *Pump type* | | | 65 KFP 45 | 125 KFP 75 |
| Wymiary w mm *Dimensions in mm* | Króciec tłoczny *Delivery stub pipe* | $D_{zt}$ | 185 | 250 |
| | | $D_{ot}$ | 145 | 210 |
| | | $D_{1t}$ | 118 | 184 |
| | | $d_{ot}$ | 65 | 125 |
| | | $d_1$ | 18 | 18 |
| | | $n_1$ | 8 | 8 |
| | | g | 22 | 22 |
| | Króciec do pary *Steam supply connection* | $d_z$ | 105 | 105 |
| | | $d_o$ | 75 | 75 |
| | | $d_1$ | 50 | 50 |
| | | $d_n$ | 20 | 20 |
| | | $d_2$ | 14 | 14 |
| | | $g_1$ | 16 | 16 |
| | | $a_1$ | 93 | 126 |
| | | $a_2$ | 158 | 162 |
| | | $b_1$ | 255 | 290 |
| | | $b_2$ | 110 | 140 |

Polska, 87-100 Toruń, ul. M.Skłodowskiej-Curie 65
tel.: +48 56 619 52 01, fax: +48 56 619 54 31,
e-mail: marketing@tofama.eu
www.tofama.eu

**TOFAMA SA**

Tabela 4. Parametry pracy pomp
*Table4. Pump operational parameters.*

| Typ pompy *Pump type* | n (1/min) *rpm* | ∅ wirnika *Impeller dia.* (mm) | H / P | Q (l/min) / Q ($m^3$/h) | | | | | | | | | | | | | | | | | | | | |
|---|---|---|---|---|---|---|---|---|---|---|---|---|---|---|---|---|---|---|---|---|---|---|---|---|
| | | | | 75 | 100 | 125 | 150 | 175 | 200 | 250 | 300 | 350 | 400 | 450 | 500 | 600 | 700 | 800 | 900 | 1000 | 1100 | | | |
| | | | (m) (kW) | 4,5 | 6 | 7,5 | 9 | 10,5 | 12 | 15 | 18 | 21 | 24 | 27 | 30 | 36 | 42 | 48 | 54 | 60 | 66 | | | |
| 50 KFP 40 | 1450 | 200 | H | | 12,0 | 11,5 | 10,7 | 9,8 | 8,6 | 5,2 | | | | | | | | | | | | | | |
| | | | P | | 1,1 | 1,15 | 1,18 | 1,21 | 1,25 | 1,28 | | | | | | | | | | | | | | |
| | | 180 | H | 9,6 | 9,2 | 8,4 | 7,2 | 5,8 | 4,2 | | | | | | | | | | | | | | | |
| | | | P | 0,48 | 0,49 | 0,51 | 0,53 | 0,55 | 0,57 | | | | | | | | | | | | | | | |
| | | 160 | H | 7,4 | 6,6 | 5,4 | 4,0 | | | | | | | | | | | | | | | | | |
| | | | P | 0,34 | 0,35 | 0,36 | 0,39 | | | | | | | | | | | | | | | | | |
| | 2900 | 200 | H | | | | 52,0 | 51,0 | 50,0 | 48,0 | 45,0 | 43,0 | 39,0 | 33,0 | | | | | | | | | | |
| | | | P | | | | 5,2 | 5,3 | 5,5 | 5,8 | 6,0 | 6,5 | 6,8 | 7,2 | | | | | | | | | | |
| | | 180 | H | | | | 46,0 | 45,0 | 44,0 | 42,0 | 39,0 | 34,0 | 28,0 | | | | | | | | | | | |
| | | | P | | | | 4,2 | 4,5 | 4,7 | 5,0 | 5,2 | 5,6 | 5,8 | | | | | | | | | | | |
| | | 160 | H | | | | 36,0 | 35,0 | 33,0 | 30,0 | 26,0 | 19,0 | | | | | | | | | | | | |
| | | | P | | | | 3,2 | 3,3 | 3,4 | 3,6 | 4,0 | 4,2 | | | | | | | | | | | | |
| | | 140* | H | | | | 23,0 | 22,0 | 20,0 | 16,0 | 10,0 | * średnica niezalecana/*not recomended dia* | | | | | | | | | | | | |
| | | | P | | | | 2,2 | 2,3 | 2,4 | 2,5 | 2,7 | | | | | | | | | | | | | |
| GTPM | 2900 | 199 | H | | | | | | | | 52,5 | 52,0 | 51,0 | 50,0 | 49,0 | 47,0 | 45,0 | 42,0 | 39,0 | 36,0 | 32,0 | | | |
| | | | P | | | | | | | | 8,0 | 8,3 | 8,5 | 8,8 | 9,0 | 9,5 | 10,0 | 10,5 | 11,0 | 11,5 | 12,0 | | | |
| | | 184 | H | | | | | | | | 45,0 | 44,0 | 43,0 | 42,0 | 40,5 | 38,0 | 35,5 | 33,0 | 30,0 | 27,0 | | | | |
| | | | P | | | | | | | | 6,75 | 7,0 | 7,2 | 7,35 | 7,5 | 8,0 | 8,25 | 8,6 | 9,0 | 9,3 | | | | |
| | | 169 | H | | | | | | | | 34,5 | 34,0 | 33,0 | 32,0 | 31,0 | 29,0 | 27,0 | 24,0 | 21,5 | 18,0 | | | | |
| | | | P | | | | | | | | 4,8 | 5,0 | 5,1 | 5,3 | 5,5 | 5,75 | 6,0 | 6,4 | 6,6 | 7,0 | | | | |

| Typ pompy *Pump type* | n (1/min) *rpm* | ∅ wirnika *Impeller dia.* (mm) | H / P | Q (l/min) / Q ($m^3$/h) | | | | | | | | | | | | | | | | | | | | |
|---|---|---|---|---|---|---|---|---|---|---|---|---|---|---|---|---|---|---|---|---|---|---|---|---|
| | | | | 300 | 400 | 500 | 600 | 700 | 800 | 900 | 1000 | 1200 | 1400 | 1600 | 1800 | 2000 | 2250 | 2500 | 2750 | 3000 | 3250 | 3500 | 4000 | 4500 |
| | | | (m) (kW) | 18 | 24 | 30 | 36 | 42 | 48 | 54 | 60 | 72 | 84 | 96 | 108 | 120 | 135 | 150 | 165 | 180 | 195 | 210 | 240 | 270 |
| 65 KFP 45 | 1450 | 280 | H | | 27,0 | 26,0 | 24,0 | 22,5 | 20,5 | 18,5 | 16,0 | | | | | | | | | | | | | |
| | | | P | | 5,2 | 5,5 | 5,8 | 6,2 | 6,5 | 6,75 | 7,0 | | | | | | | | | | | | | |
| | | 260 | H | | 21,5 | 20,5 | 19,5 | 18,0 | 16,5 | 15,0 | | | | | | | | | | | | | | |
| | | | P | | 4,0 | 4,25 | 4,5 | 4,7 | 4,95 | 5,2 | | | | | | | | | | | | | | |
| | | 240 | H | | 16,0 | 15,0 | 14,0 | 13,0 | 11,5 | | | | | | | | | | | | | | | |
| | | | P | | 3,5 | 3,7 | 3,95 | 4,15 | 4,4 | | | | | | | | | | | | | | | |
| | | 220 | H | 13,5 | 13,0 | 12,0 | 11,0 | 9,5 | | | | | | | | | | | | | | | | |
| | | | P | 2,85 | 3,0 | 3,2 | 3,35 | 3,5 | | | | | | | | | | | | | | | | |
| | 2900 | 280 | H | | | | 100 | 98,0 | 95,0 | 92,0 | 89,0 | 83,0 | 76,0 | | | | | | | | | | | |
| | | | P | | | | 30,0 | 31,0 | 32,0 | 32,5 | 33,5 | 35,0 | 38,0 | | | | | | | | | | | |
| | | 260 | H | | | 84,5 | 83,5 | 82,0 | 80,0 | 78,0 | 76,0 | 70,0 | 65,0 | | | | | | | | | | | |
| | | | P | | | 21,0 | 22,0 | 23,0 | 24,0 | 25,0 | 26,5 | 28,5 | 31,0 | | | | | | | | | | | |
| | | 240 | H | | | 73,0 | 72,0 | 70,5 | 69,0 | 67,0 | 65,0 | 60,0 | | | | | | | | | | | | |
| | | | P | | | 16,5 | 17,5 | 18,5 | 19,5 | 20,0 | 21,0 | 22,5 | | | | | | | | | | | | |
| | | 220 | H | | 62,0 | 60,5 | 59,0 | 58,0 | 56,0 | 54,0 | 52,0 | 47,0 | | | | | | | | | | | | |
| | | | P | | 13,0 | 13,8 | 14,5 | 15,0 | 15,5 | 16,0 | 17,0 | 18,0 | | | | | | | | | | | | |
| 125 KFP 75 | 730 | 365 | H | | | | | | 14,7 | 14,6 | 14,4 | 14,0 | 13,5 | 12,8 | 12,4 | 11,4 | 10,2 | | | | | | | |
| | | | P | | | | | | 3,2 | 3,35 | 3,4 | 3,5 | 3,65 | 3,85 | 4,0 | 4,15 | 4,3 | | | | | | | |
| | | 335 | H | | | | | | 10,9 | 10,7 | 10,6 | 10,2 | 9,5 | 8,8 | 7,8 | | | | | | | | | |
| | | | P | | | | | | 2,5 | 2,6 | 2,7 | 2,85 | 3,0 | 3,2 | 3,4 | | | | | | | | | |
| | | 305 | H | | | | | | 9,3 | 9,2 | 8,9 | 8,4 | 7,6 | 6,6 | | | | | | | | | | |
| | | | P | | | | | | 2,15 | 2,25 | 2,3 | 2,5 | 2,6 | 2,8 | | | | | | | | | | |
| | | 285 | H | | | | | | 7,8 | 7,6 | 7,4 | 6,7 | 5,8 | 4,8 | | | | | | | | | | |
| | | | P | | | | | | 1,9 | 1,95 | 2,0 | 2,1 | 2,2 | 2,3 | | | | | | | | | | |
| | 1450 | 365 | H | | | | | | | | | | | | | 47,0 | 46,0 | 45,0 | 44,0 | 42,5 | 41,5 | 40,5 | 38,0 | 35,5 |
| | | | P | | | | | | | | | | | | | 30,5 | 31,0 | 31,5 | 32,0 | 32,5 | 33,0 | 34,0 | 35,0 | 36,0 |
| | | 335 | H | | | | | | | | | | | | | 38,0 | 37,0 | 35,5 | 34,5 | 33,0 | 32,0 | 30,0 | 27,5 | |
| | | | P | | | | | | | | | | | | | 22,0 | 22,5 | 23,5 | 24,0 | 25,0 | 25,5 | 26,0 | 27,0 | |
| | | 305 | H | | | | | | | | | | | | 28,5 | 28,0 | 26,5 | 25,0 | 24,0 | 22,5 | 21,0 | | | |
| | | | P | | | | | | | | | | | | 14,5 | 15,0 | 15,5 | 16,0 | 16,5 | 17,0 | 17,5 | | | |
| | | 285 | H | | | | | | | | | | | 24,5 | 23,5 | 22,5 | 21,5 | 20,0 | 18,5 | 17,0 | | | | |
| | | | P | | | | | | | | | | | 10,5 | 11,0 | 11,3 | 11,7 | 12,0 | 12,5 | 13,0 | | | | |

Q -wydajność; H-wysokość podnoszenia; P-moc na wale. Podane Q; H; P dotyczą pompowania wody o temp. 20°C.
Odbiór pompy wg PN-EN ISO 9906 (Q±9%; H±7%; P+9%)

*Q-delivery; H-head; P-shaft power. Q, H, P given in the table are for pumping water at the temperature of. 20°C.*
*Pump acceptance according to PN-EN ISO 9906 (Q±9%; H±7%; P+9%).*